Double-Ended Cordsets

BCC W313-W413-3E-300-SW0434-010
Order Code: BCC0HYJ

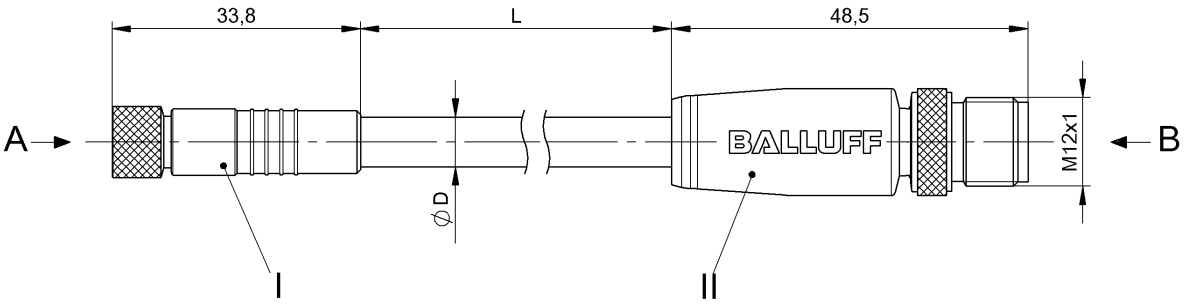

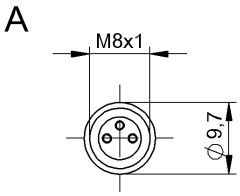

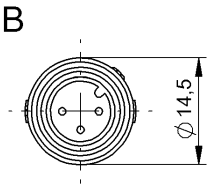

Basic features

Application	Welding area
Approval/Conformity	CE cULus WEEE

Electrical connection

Bending radius min., fixed cable	10 x D
Bending radius min., flexible cable	15 x D
Cable	Silicone welding spark resistant black, 1 m
Cable diameter D	5.70 mm ±0.25 mm
Conductor cross-section	0.34 mm²
Connection 1	M8x1-Female, straight, 3-pin, A-coded
Connection 2	M12x1-Male, straight, 3-pin, A-coded
Number of conductors	4
System	Molded/Molded

Electrical data

Operating voltage Ub	60 VDC / 60 VAC
Rated current (40 °C)	4.0 A

Environmental conditions

Cable temperature UL max., fixed routing	150 °C
Cable temperature UL max., flexible routing	150 °C
Cable temperature, fixed routing	-40...200 °C
Cable temperature, flexible routing	-25...200 °C
IP rating	IP65/IP65

Material

Cable jacket material, note	welding spark resistant
Cable jacket, material	Silicone
Material contact carrier	PUR, special/PUR, special
Material contacts	Bronze/Brass
Material cover nut	Brass PTFE coated/Brass PTFE coated
Material grip	PUR, special/PUR, special

Mechanical data

Cable jacket, color	black
Cable length L	1.00 m
Tightening torque pigtail	0.4 Nm/0.6 Nm

Remarks

Cable construction acc. to UL-AWM Style 4535
Halogen-free per IEC 60754
Maximum temperature at outer jacket from weld spatter/beads short-time 800°C.
Enclosure rating per IEC 60529, only in screwed state with the associated mating piece.

BCC W313-W413-3E-300-SW0434-010
Order Code: BCC0HYJ

Connector Drawings

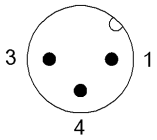

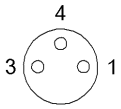

II	I
PIN 1: brown	PIN 1: brown
PIN 3: blue	PIN 3: blue
PIN 4: black	PIN 4: black
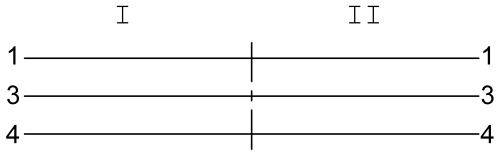
Wiring Diagrams